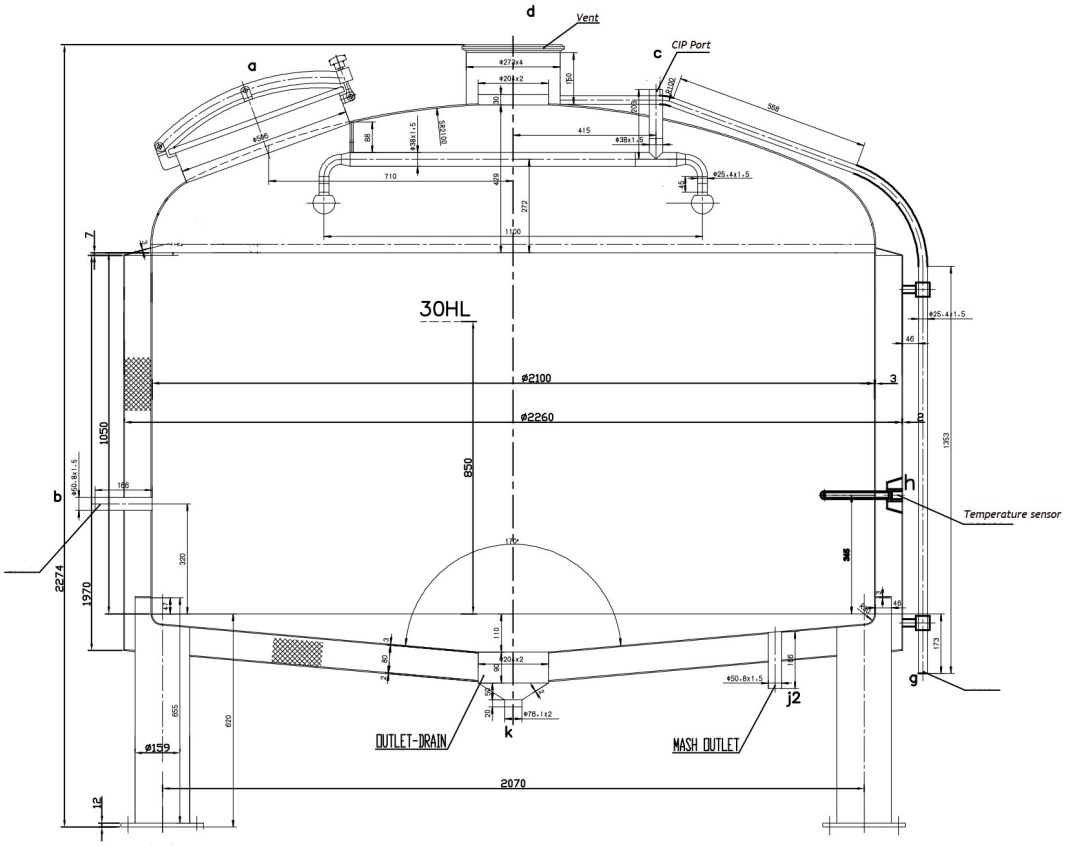

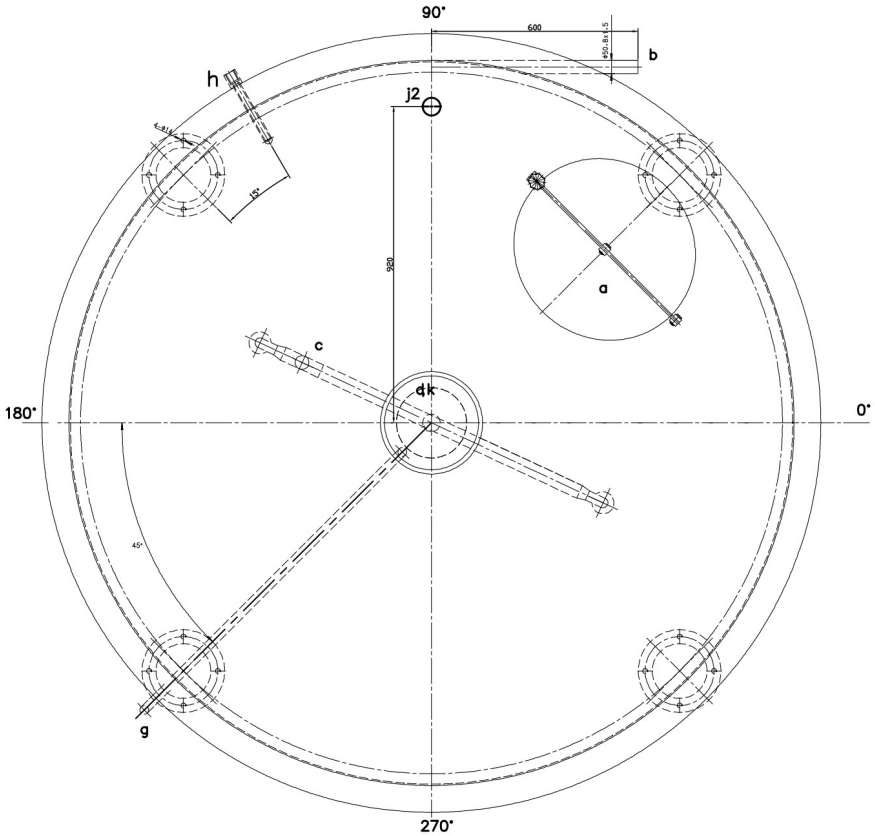

Net Volume/Total Volume: 3000L/4000L
Material: 304

k	3"	Drain outlet		
j2	2"	Mash outlet		
h	G1/2"	Temperature sensor		
e	1"	Condenser pipe		
d	DN250	Vent		
c	1.5"	CIP Port		
b	2"	Whirlpool inlet		
a	DN500	Manway		

304

A

3000L